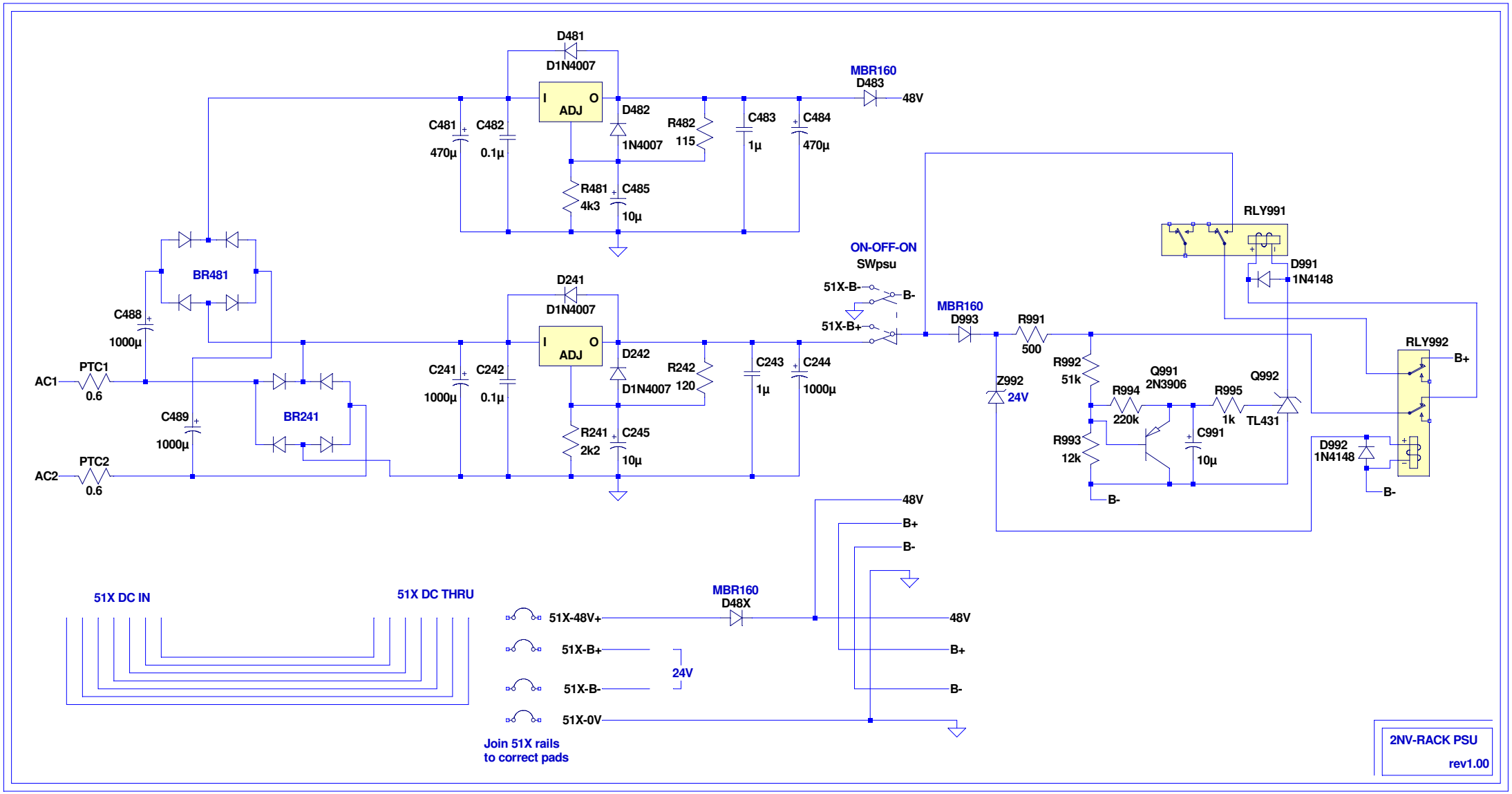

--- P:\AUDIO DIY\LTspiceIV\schematic 2nv73\2nvrack_PSU_schematic.asc ---